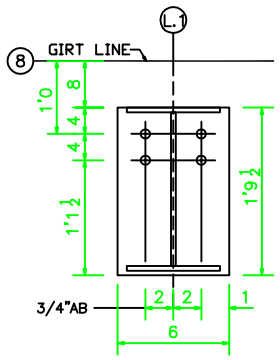

BP03–B

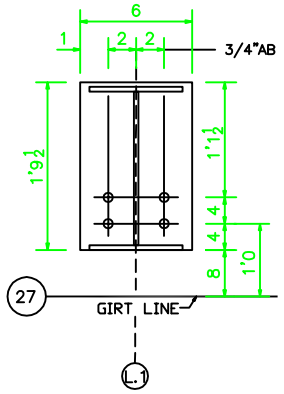

BP07–B

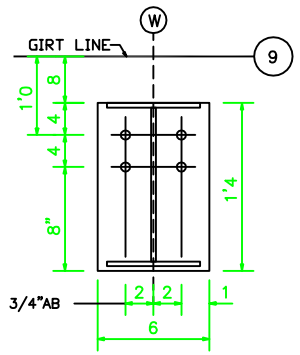

BP01–C

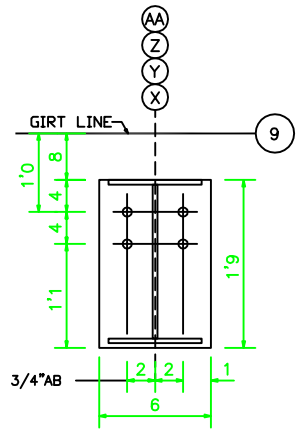

BP02–C

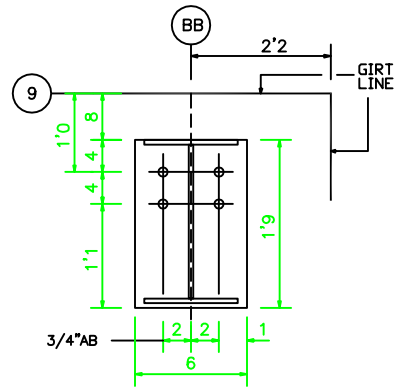

BP03–C

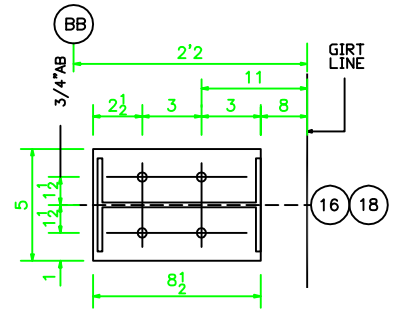

BP04–C

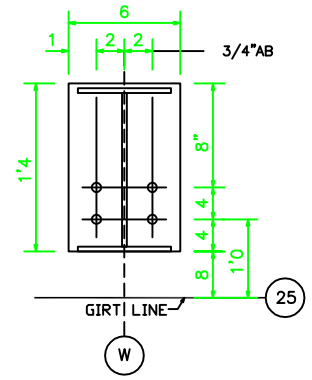

BP05–C

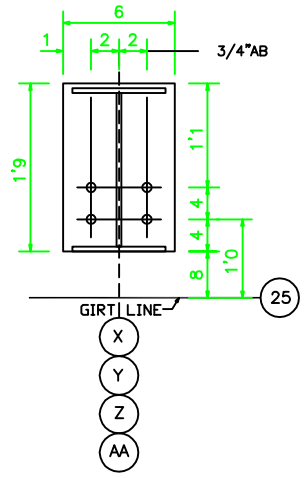

BP06–C

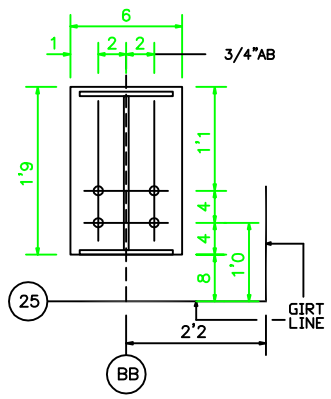

BP07–C

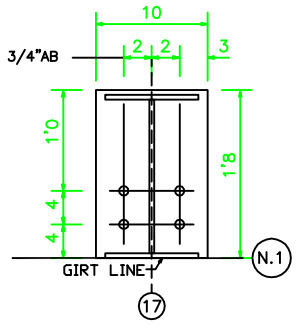

BP01–I

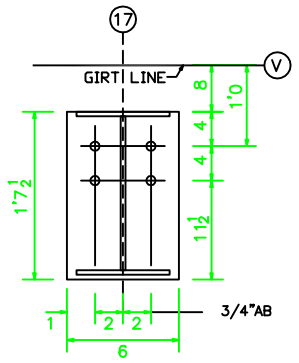

BP02–I

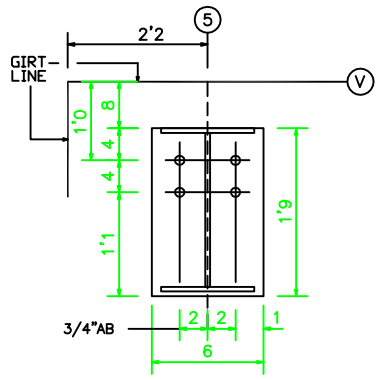

BP01–D

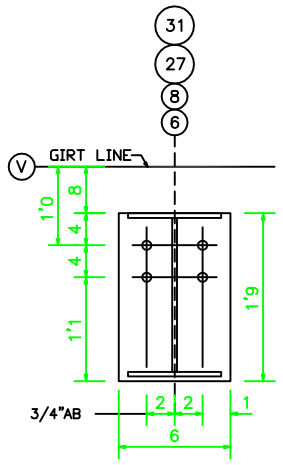

BP02–D

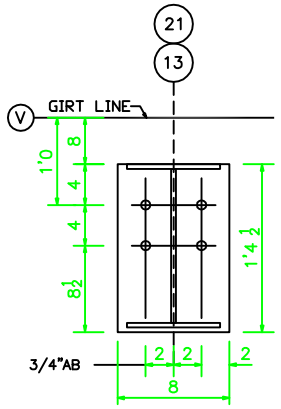

BP03–D

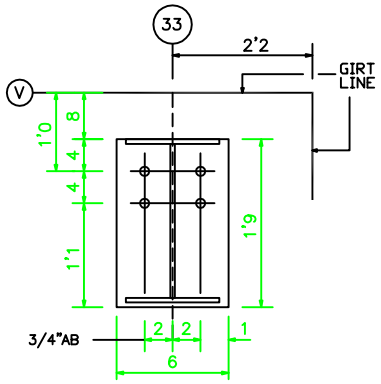

BP04–D

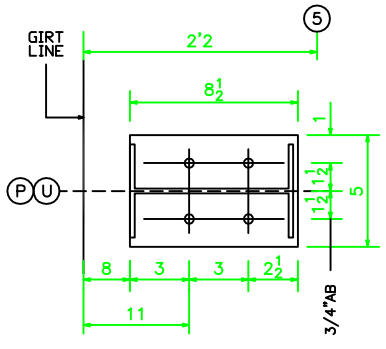

BP05–D

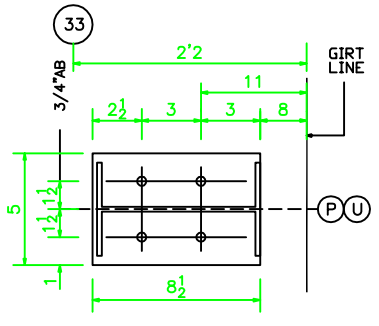

BP06–D

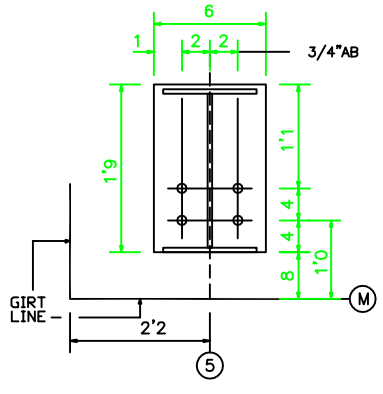

BP07–D

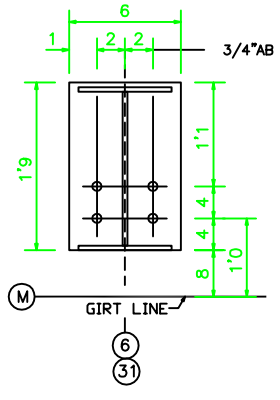

BP08–D

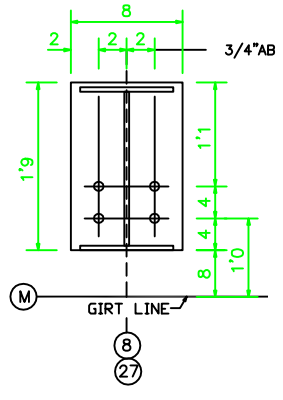

BP09–D

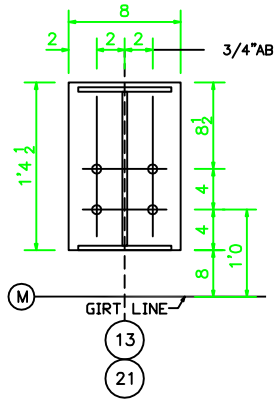

BP10–D

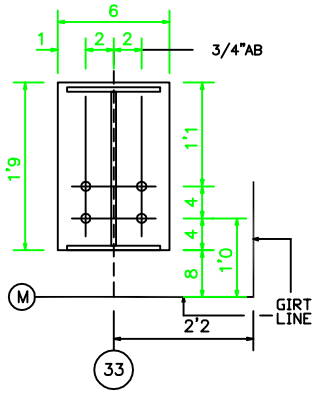

BP11–D

BASEPLATE DETAILS

NO.	REVISIONS	MADE	CK'D	DATE	ENGR	DATE

NO.	REVISIONS	MADE	CK'D	DATE	ENGR	DATE
0	ISSUED FOR CONSTRUCTION			08/18/05		
A	PLANS FOR APPROVAL			04/21/05		

DRAWING SUBMITTAL STATUS
[X] FOR CONSTRUCTION
[ ] FOR APPROVAL
[ ] FOR PERMIT ONLY
[ ] FOR PRELIMINARY
CAD BY: MC

SCALE:	NONE	DATE
DRAWN BY:	MAH	04/21/05
CHECKED BY:	YHW	04/21/05
DESIGN APPD BY:		04/29/05
04/12/05	11:06:49	Ver. 23.1

UNIONVILLE BAPTIST CHURCH
BAUCOM ROAD
MONROE, NC
MCT GENERAL CONTRACTORS

DRAWING NUMBER: 71105601 AB–104
REV.NO. 0